Falcon HTS Multiwell™ Insert Systems

APPLICATIONS:

A single-use, automation-friendly platform used for membrane-based cellular assays.

This system consists of a 24-well Multiwell™ Insert Plate, Lid, and Feeder Tray, and is compatible with the high throughput automation systems commonly used in Drug Discovery testing.

The Multiwell™ Insert System will support the same cell-based assays currently supported by the individual Falcon or BIOCOAT® cell culture inserts.

FEATURES:

- Compatible with Falcon 24-well Multiwell™ plates
- Compatible with common drug screening laboratory robot arms / grippers / manipulators
- Compatible with Endohm meter
- Allows multiple sampling from above and below membrane with common automated fluid handler pipet tips without cross contamination of samples
- Allows even coating of membrane surface with matrix proteins
- Provides sterile environment for conducting assays
- Provides adequate gas exchange to maintain pH for conducting assays
- Free of cytotoxic components
- Upper chamber of insert plate holds up to 500µL of media without wicking
- Lower chamber (24-well plate) holds up to 1400µL of media without wicking
- Feeder Tray holds up to 35mL of media without wicking
- Plane of membrane lies within working distance of commonly used microscopes
- Alpha-numeric well identification

STERILITY:

- Gamma-irradiated

RESTRICTIONS:

- Product is for Research Use Only
- Not for Diagnostic Procedures
- In general, for use with aqueous reagents used for tissue culture
- Refer to "Thermoplastics Properties Chart," available via internet at *http://www.bd.com/labware/freestuf/*

Falcon HTS Multiwell™ Insert Systems

RELATED CATALOG NO'S:

[35]4801	HTS Caco-2 Assay System,		Single Pack
[35]4802	HTS Caco-2 Assay System,		Five Pack
[35]4803	HTS Fibrillar Collagen Multiwell Insert Plate,		Single Pack
[35]4804	HTS Fibrillar Collagen Multiwell Insert Plate,		Five Pack
[35]1180	HTS Multiwell Insert System,	1 Micron PET,	Single Pack
[35]1181	HTS Multiwell Insert System,	1 Micron PET,	Five Pack
[35]1182	HTS Multiwell Insert System,	3 Micron PET,	Single Pack
[35]1183	HTS Multiwell Insert System,	3 Micron PET,	Five Pack
[35]1184	HTS Multiwell Insert System,	8 Micron PET,	Single Pack
[35]1185	HTS Multiwell Insert System,	8 Micron PET,	Five Pack
[35]1186	HTS Feeder Tray and Lid,		Five Pack

LID:
Material: PET (Polyethylene Terepthalate)
Length: **A** = 129.57 mm (5.101 inches)
Width: **B** = 86.82 mm (3.418 inches)
Height: **C** = 8.20 mm (0.323 inches)

INSERT PLATE HOUSING:
Material: PET (Polyethylene Terepthalate)
Length: **D** = 127.61 mm (5.024 inches)
Width: **E** = 85.01 mm (3.347 inches)
Height: **F** = 17.96 mm (0.707 inches)
Ht. w/Lid only: 20.17 mm (0.794 inches)
Ht. w/Lid & Tray: 24.10 mm (0.949 inches)

Insert Wells:
Top Interior Diameter: 12.50 mm (0.492 inches)
Bot. Interior (Membrane) Dia: 6.50 mm (0.256 inches)
Bot. Exterior Diameter: 10.00 mm (0.394 inches)
Total Well Depth: 17.96 mm (0.707 inches)
Well Depth below Cutout: 11.96 mm (0.471 inches)
Membrane Dist. from Tray: 1.4 mm (0.06 inches)
Well to Well Distance: 19.30 mm (0.760 inches)
Sampling Port Length: 9.5 mm (0.37 inches)
Sampling Port Width: 4.0 mm (0.16 inches)
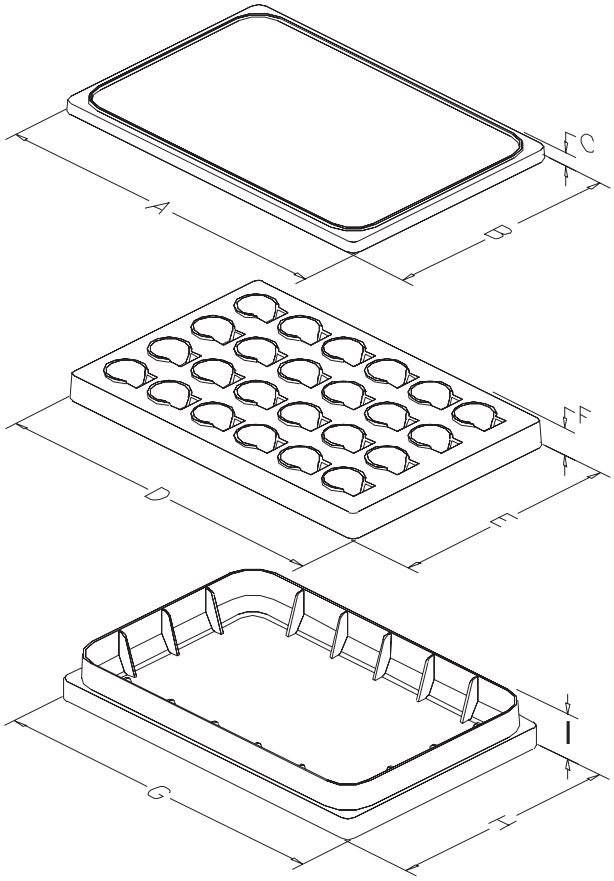
FEEDER TRAY:
Material: PS (Polystyrene)
Length: **G** = 127.86 mm (5.034 inches)
Width: **H** = 85.47 mm (3.365 inches)
Height: **I** = 19.94 mm (0.785 inches)
Height w/Lid only: 22.15 mm (0.872 inches)